TERRA TRAC ACTIVE DRIVE – Crawler drive for trailed implements

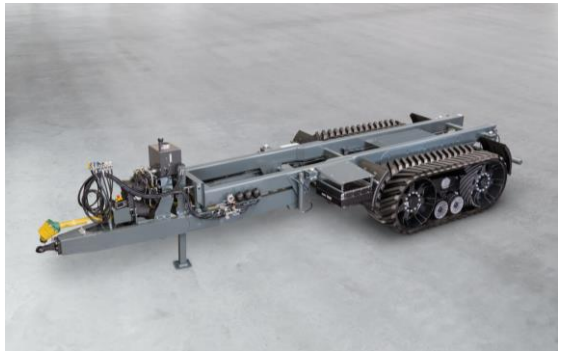

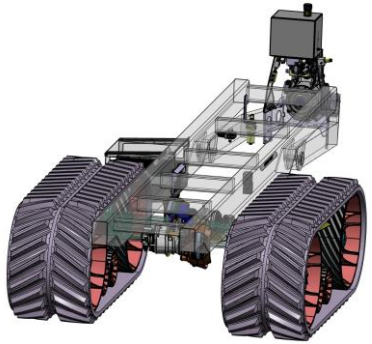

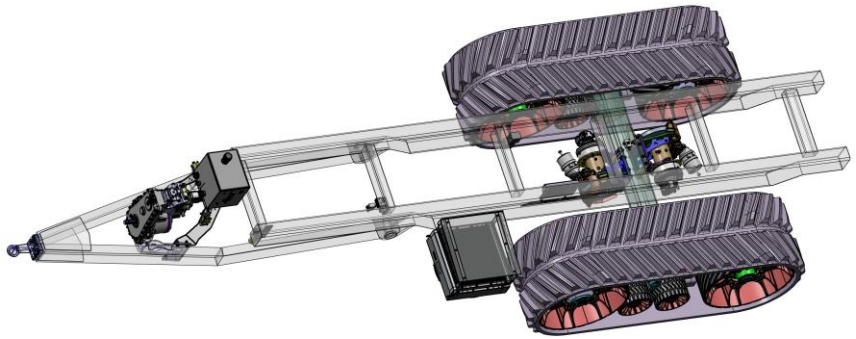

Crawler drive for Implements.
TERRA TRAC ACTIVE DRIVE consists of components for a hydrostatic drive system in trailed vehicles and is supplemented with the proven TERRA TRAC 200 crawler track. The drive train is closed and is driven via the tractor PTO. TERRA TRAC ACTIVE DRIVE provides thrust assistance for the tractor vehicle in both directions of travel, which can be activated in the field. As a drive component kit, TERRA TRAC ACTIVE DRIVE can be used in a wide variety of applications, e.g. in slurry tankers, lime and manure spreaders, transfer cars or airseeders.

Permissible machine parameters	
Possible driving speed	40 km/h
Max. Axle load in the field	36 t per pair of caterpillars
Traction	5,5 t per pair of caterpillars

Variants	
Treadmill width	800 oder 890 mm
Contact area	1825 mm

Structure	
Technical details	+ Hydraulic drive system with adjustable hydraulic units for variable thrust assistance. + Mechanical friction brake + Switchable thrust assistance in both directions up to 15km/h + Pump transfer gearbox with lamella-coupled through drive + Operation via ISO Bus Terminal
Advantages	+ Reduced slippage, ground pressure and ground shear. + Increased mobility in all operating conditions and thus earlier and longer operating times + Less ballasting of the tractor required